Data Sheet

Article number: 12859100080840
Description: KLEE-coil 859 100 080.840
M8 Brass

Measures

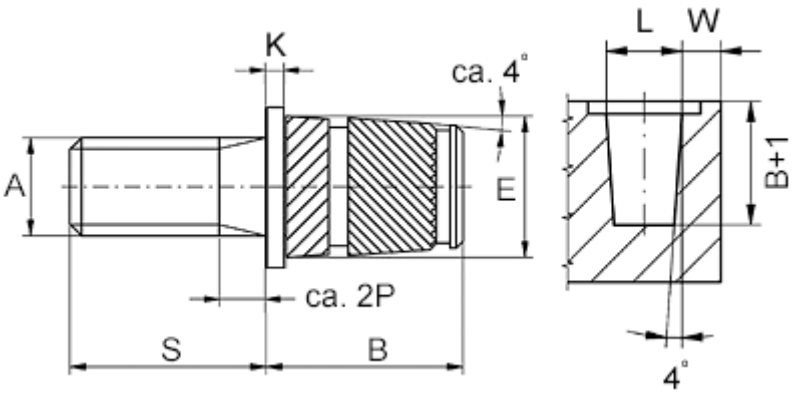

Flange diameter E1	= 12.5
Flange heigth	= 1.3
Male thread A	= M8x1,25
Min distance to edge W	= 3.0
Mounting length B	= 13.3
Outer diameter E	= 11.2
Pin length S	= 10
Recommended bore diameter W +0.1	= 10.9

Product drawings and brochures of any kind may contain errors for which Brd. Klee A/S cannot be liable.